67” French Bateau Pedestal Tub Specs

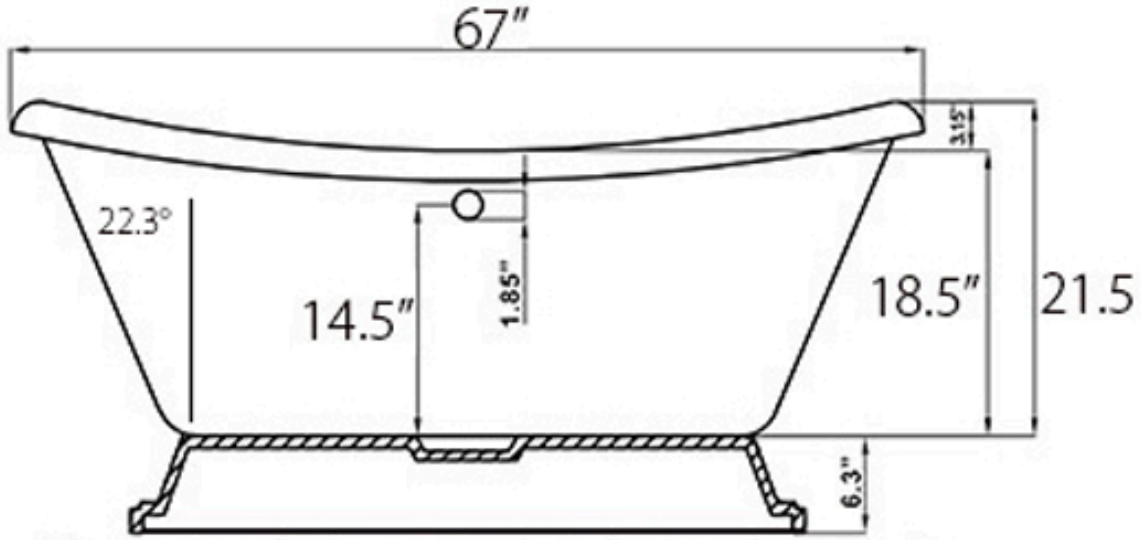

No cut-out in pedestal at front or back

